OPTIONAL SUCTION AND DISCHARGE FLANGES			
FLANGE	FLANGE BOLT PATTERN ON VOLUTE BODY	FLANGE PART NO. (THREAD SIZE) 125 LB CAST IRON	150 LB BRASS
A	(8) 3/4-10UNC-2B X .13 DEEP TAPPED HOLES EQUALLY SPACED ON 11.75 DIA. BOLT CIRCLE AND ROTATED 22.5° FROM CENTERLINES AS SHOWN	082-1801-00-0 (8" NPT)	082-1801-02-0 (8" NPT)
B	(8) 3/4-10UNC-2B X .13 DEEP TAPPED HOLES EQUALLY SPACED ON 9.50 DIA. BOLT CIRCLE AND ROTATED 22.5° FROM CENTERLINES AS SHOWN	082-1501-00-0 (6" NPT)	082-1501-02-0 (6" NPT)
C	(8) 7/8-9UNC-2B THRU HOLES EQUALLY SPACED ON 9.50 DIA. BOLT CIRCLE AND ROTATED 22.5° FROM CENTERLINES AS SHOWN (PUMP DISCHARGE)	082-1303-00-0 (4" NPT)	N / A
	(8) 5/8-11UNC-2B THRU TAPPED HOLES EQUALLY SPACED ON 7.50 DIA. BOLT CIRCLE AND ROTATED 22.5° FROM CENTERLINES AS SHOWN		

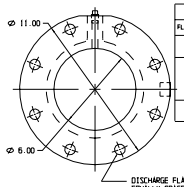

DISCHARGE FLANGE CONNECTION - (8) HOLES DRILLED THRU .781 EQUALLY SPACED ON 9.50 DIA. BOLT CIRCLE AND SYMMETRIC ABOUT CENTERLINES AS SHOWN (STANDARD 6" CLASS 125 PIPE FLANGE) MATING 6" NPT FLANGE AVAILABLE (FLANGE "B" - SEE TABLE)

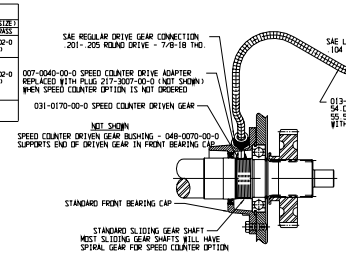

PUMP MODEL	GEAR RATIO	GEARBOX TYPE **	D	E	F	G	H	J	K	L	M	PUMP DRIVE GEAR PART NO. TEETH	VOLUTE/PLATE GEAR PART NO. (TEETH)	REAR BEARING HOUSING CAST IRON (STD)	REAR BEARING HOUSING BRONZE (OPTION)	GEARBOX HOUSING ASSY	DRIVE UNIT COVER GASKET
8FGF*-28	2.83	LONG (L) ONLY	20.94	15.56	6.50	5.44	4.06	1.84	9.15	14.44	27.94	031-0920-00-0 (18T)	031-1310-00-0 (59T)	062-0661-00-0	062-0661-03-0	504-0510-00-0	046-6370-01-0
8FGF*-25	2.55			15.75								031-0930-00-0 (20T)		062-0661-01-0	062-0661-04-0		
8FGF*-23	2.32			15.90								031-0940-00-0 (22T)		062-0661-02-0	062-0661-05-0		
8FGF*-21	2.13			16.06								031-0950-00-0 (24T)		062-0661-01-0	062-0661-04-0		
8FGF*-19	1.96			16.25								031-0960-00-0 (26T)		062-0661-00-0	062-0661-03-0		
8FGF*-23	2.28	LONG (L) ONLY	18.56	13.38	6.50	4.31	5.18	2.00	7.00	23.03	25.56	031-0920-00-0 (18T)	031-0980-00-0 (51T)	062-0661-00-0	062-0661-03-0	504-0340-00-0	046-6370-01-0
8FGF*-21	2.05			13.56								031-0930-00-0 (20T)		062-0661-01-0	062-0661-04-0		
8FGF*-19	1.86			13.75								031-0940-00-0 (22T)		062-0661-02-0	062-0661-05-0		
8FGF*-17	1.71			13.94								031-0950-00-0 (24T)		062-0661-01-0	062-0661-04-0		
8FGF*-15	1.68			14.13								031-0960-00-0 (26T)		062-0661-00-0	062-0661-03-0		

⚠ WARNING ⚠

EXCEEDING THESE LIMITS OR FAILURE TO FOLLOW THE RECOMMENDATIONS OUTLINED ON THIS DRAWING COULD DAMAGE THE GEARBOX AND RESULT IN PERSONAL INJURY.
BFGF MIDSHIP MAXIMUM PUMP PRESSURE:
HYDROSTATIC = 500 PSIG
HYDRODYNAMIC = 400 PSIG
MAXIMUM GEARBOX INPUT TORQUE (ROAD) = 16,000 LBS-FT

PUMP MODEL	BFGF*-23L	BFGF*-21L	BFGF*-19L	BFGF*-17L	BFGF*-15L
MAX GEARBOX INPUT RPM	2630	2920	3220	3500	3800
PUMP MODEL	BFGF*-28X	BFGF*-25X	BFGF*-23X	BFGF*-21X	BFGF*-19X
MAX GEARBOX INPUT RPM	2120	2350	2580	2810	3050

SEE HALE TORQUE LIMIT CHART F-72 FOR ADDITIONAL DATA.

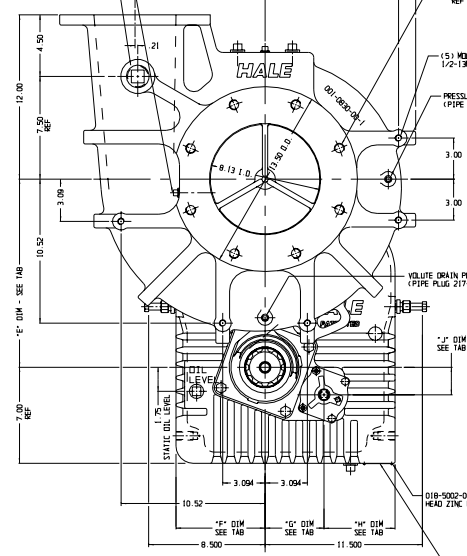

PLEASE INCLUDE THE MODEL NUMBER AND SERIAL NUMBER WHEN ORDERING PARTS OR REQUESTING INFORMATION

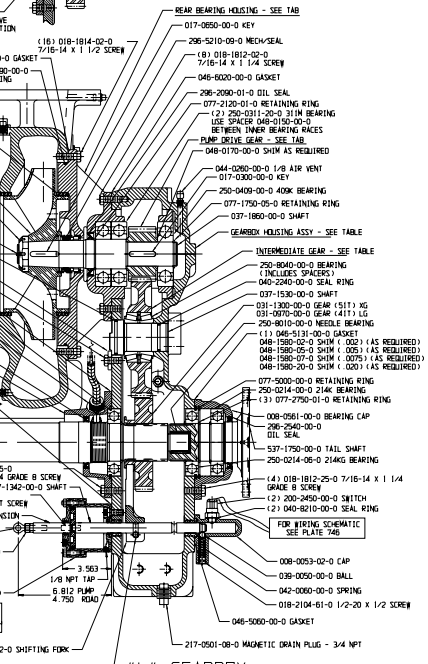

SOME COMPONENTS IN SECTION VIEW ARE SHOWN OUT-OF-POSITION FOR CLARITY

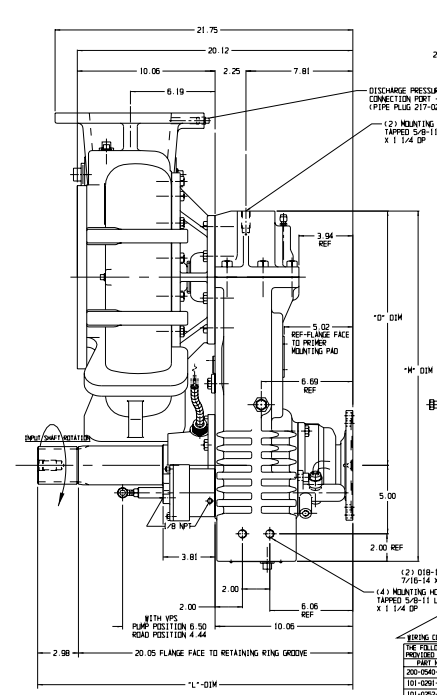

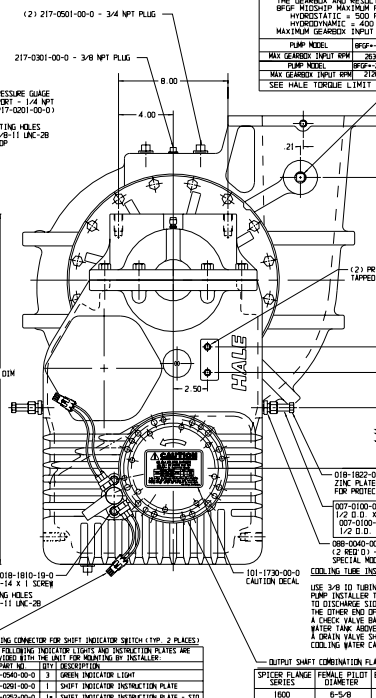

COOLING TUBE INSTALLATION NOTE:

USE 3/8 ID TUBING TO ENSURE ADEQUATE WATER FLOW. PUMP INSTALLER TO CONNECT ONE END OF COOLING TUBE TO DISCHARGE SIDE OF PUMP. THE OTHER END OF THE TUBE SHOULD BE PLUMBED THROUGH A CHECK VALVE BACK TO THE TOP OF THE ON BOARD WATER TANK ABOVE WATER LEVEL. A DRAIN VALVE SHOULD BE PROVIDED SO THE COOLING WATER CAN DRAIN IN FREEZING WEATHER CONDITIONS.

WIRING CONNECTOR FOR SHIFT INDICATOR SWITCH (TYP. 2 PLACES)

THE FOLLOWING INDICATOR LIGHTS AND INSTRUCTION PLATES ARE PROVIDED WITH THE UNIT FOR MOUNTING BY INSTALLER:		
PART NO.	QTY	DESCRIPTION
200-0540-00-0	3	GREEN INDICATOR LIGHT
101-0261-00-0	1	SHIFT INDICATOR INSTRUCTION PLATE
101-0252-00-0	1*	SHIFT INDICATOR INSTRUCTION PLATE - STD
101-0072-00-0	1*	SHIFT INDICATOR INSTRUCTION PLATE - VPS
* VPS INSTRUCTION PLATE IS REPLACED BY (1) ADDITIONAL 101-0252-00-0 INSTRUCTION PLATE FOR MANUAL SHIFT UNITS.		

SEE HALE PLATE 748 - WIRING SCHEMATIC FOR SHIFT INDICATOR LIGHTS. FOR INSTALLATION DETAILS.

OUTPUT SHAFT COMBINATION FLANGE - MATCHES FLANGES NOTED BELOW

SPICER FLANGE SERIES	FEMALE PILOT DIAMETER	BOLT CIRCLE DIAMETER	MTG BOLTS (SAE GR 8) QTY REQ'D	DIAMETER
1600	6-5/8	6-1/8	8	3/8
1700	7-3/4	7-1/4	8	3/8
1800	7-3/4	7-1/4	12	7/16

HALE TYPE 8FGF MODEL IDENTIFICATION

THE HALE TYPE 8FGF PUMP IS AVAILABLE WITH 2000 AND 2500 GPM NFPA RATINGS, AND A 3000 GPM AT 150 PSI RATING. FIVE DRIVE RATIOS ARE AVAILABLE TO ADAPT THE 8FGF TO A WIDE VARIETY OF APPLICATIONS (SEE RATIO CHART).
THE RATING, RATIO, AND DRIVE UNIT TYPE DETERMINE THE MODEL NUMBER. FOR EXAMPLE, THE FULL MODEL NUMBER FOR AN 8FGF RATED AT 3000 GPM WITH A 2.28 : 1 DRIVE RATIO AND HALE "L" TYPE DRIVE UNIT WOULD BE:

8FGF-3000-23 L

- PUMP TYPE
- CAPACITY IN U.S. GALLONS PER MINUTE
- DRIVE RATIO (23 = 1 : 2.28)
- DRIVE UNIT TYPE

INPUT RPM X RATIO = IMPELLER RPM

BE SURE TO INCLUDE THE MODEL NUMBER AND SERIAL NUMBER WHEN ORDERING PARTS OR REQUESTING INFORMATION. THE MODEL / SERIAL NUMBER PLATE IS LOCATED ON BOTTOM OF GEAR DRIVE AS SHOWN IN DRAWING.

⚠ WARNING ALL WIRING AND INSTALLATION DETAILS MUST CONFORM TO ALL APPLICABLE NFPA AND SAE STANDARDS.
VERIFY OPERATION OF PUMP ENGAGED INDICATOR LIGHTS AND INTERLOCKS BEFORE PLACING APPARATUS IN SERVICE

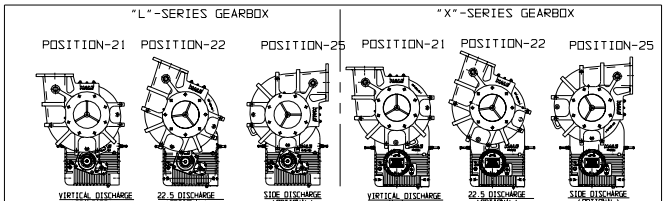

INPUT SHAFT AND PUMP SHAFT ROTATE CLOCKWISE ('ENGINE ROTATION') IN THESE VIEWS

VERTICAL DISCHARGE IS STANDARD UNLESS 22.5 OR SIDE DISCHARGE IS SPECIFIED ON ORDER. ADDITIONAL PUMP BODY AND GEARBOX POSITIONS ARE POSSIBLE - PLEASE CONSULT THE FACTORY

NOTE:
REFER TO SECTION VIEW ABOVE FOR ALL OTHER PARTS.

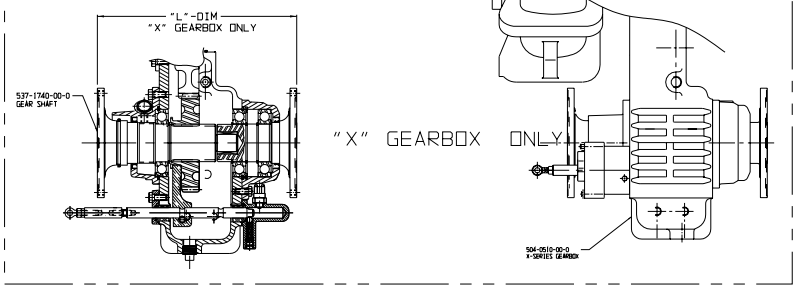

FASTENER NOTE:

UNLESS OTHERWISE NOTED FASTENERS TO BE USED ARE GRADE 5.
MAKE SURE GRADE 5 FASTENERS ARE USED TO REPLACE BROKEN OR DAMAGED FASTENERS.
DURING ASSEMBLY COAT FASTENERS WITH LOCTITE #245 (OR EQUAL) HIGH TEMPERATURE REMOVABLE THREAD LOCKER.

THIS PRODUCT AND ITS COMPONENTS MAY BE PROTECTED BY ONE OR MORE OF THE FOLLOWING U.S. PATENTS AND OTHER PATENTS PENDING:
4,337,830 5,018,665
4,587,862 5,139,363
4,653,978

HALE TYPE 8FGF SERIES PUMP

PLATE 784AH

ECO NO	REV	CHANGED FROM	BY	DATE	APVD
04-017	G	1) WAS 250-0311-00-0 2) WAS 018-1810-02-0 3) WAS 046-2040-00-0 (2) PL	TKC	1-22-04	MAL
04-280	H	046-5130-01-0 TO 046-5131-00-0 & SHIM	JFG	11-16-04	MAL

ECO NO	REV	CHANGED FROM	BY	DATE	APVD
99-215	D	1) WAS 250-0311-00-0 2) WAS 018-1810-02-0 3) WAS 046-2040-00-0 (2) PL	DPL	8-20-99	RET
01-151	E	UPDATE W/DESCRIPTIONS	TKC	3-22-01	MAL
01-210	F	ADDED SHIM 048-0170-00-0	TKC	4-27-01	MAL

ECO NO	REV	CHANGED FROM	BY	DATE	APVD
95-291	A	RELEASED FOR PRODUCTION	AJD	6-1-95	RDT
97-42	B	ADDED "L" TO MODEL DESCRIPTION AND TO DRIVE TABLE. ADDED NOTE FOR SHIM USING GEARBOX. DWG. WAS MARKED "PRELIMINARY"	AJD	3-31-97	MD

HALE PRODUCTS, INC.
A Unit of IDEX Corporation
Conshohocken, PA 19428 USA

COPYRIGHT © 2001 HALE PRODUCTS, INC. THIS DOCUMENT MAY NOT BE REPRODUCED OR DISCLOSED WITHOUT WRITTEN PERMISSION.

DRAWN: AJD DATE: 11-1-95 SIZE: 37 X 22 SCALE: 1/4