538-1580-10-0

HALE TYPE SPV SEMI-AUTOMATIC PRIMING VALVE (WITH UNIVERSAL MOUNTING ADAPTER)

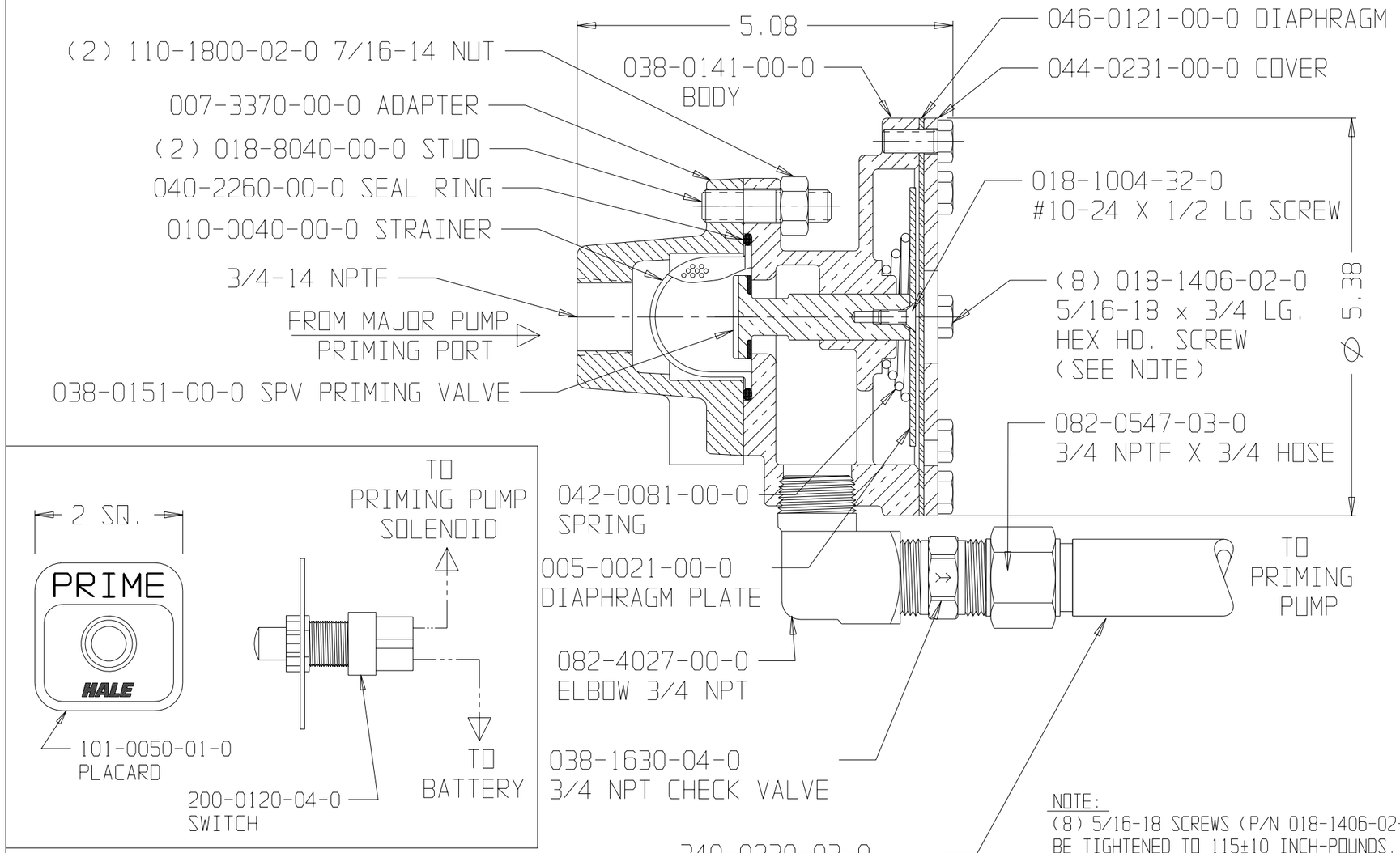

NOTE:
(8) 5/16-18 SCREWS (P/N 018-1406-02-0) SHALL BE TIGHTENED TO 115±10 INCH-POUNDS. NOT FOLLOWING THIS TORQUE RECOMMENDATION COULD CAUSE THE VALVE NOT TO FUCTION PROPERLY.

PLATE NO. 828AE

ECO NO	REV	CHANGED FROM	BY	DATE	APVD
01-177	E	UPDATED W/DESCRIPTIONS	TKC	4-5-01	MAL

ECO NO	REV	CHANGED FROM	BY	DATE	APVD
95-169	A	RELEASED FOR PRODUCTION	DLM	8-15-95	RET
96-63	B	B1, ADDED; B2, 082-4027-01-0; B3, 340-0640-00-1	PRW	3-29-96	RET
00-525	C	DELETED 038-1630-03-0, 082-0501-02-0 & 082-0547-02-0 ADDED 038-1630-04-0 & 082-0547-03-0	JBS	07-14-00	MAL
00-602	D	ADDED NOTE	JBS	09-20-00	MAL

HALE PRODUCTS, INC.
A Unit of IDEX Corporation
Conshohocken, PA 19428 USA

COPYRIGHT © NOT TO BE REPRODUCED OR USED TO MAKE OTHER DRAWINGS OR MACHINERY.

DRAWN DLM | CHECKED RDT | DATE 8-15-95 | SIZE C | SCALE: FULL