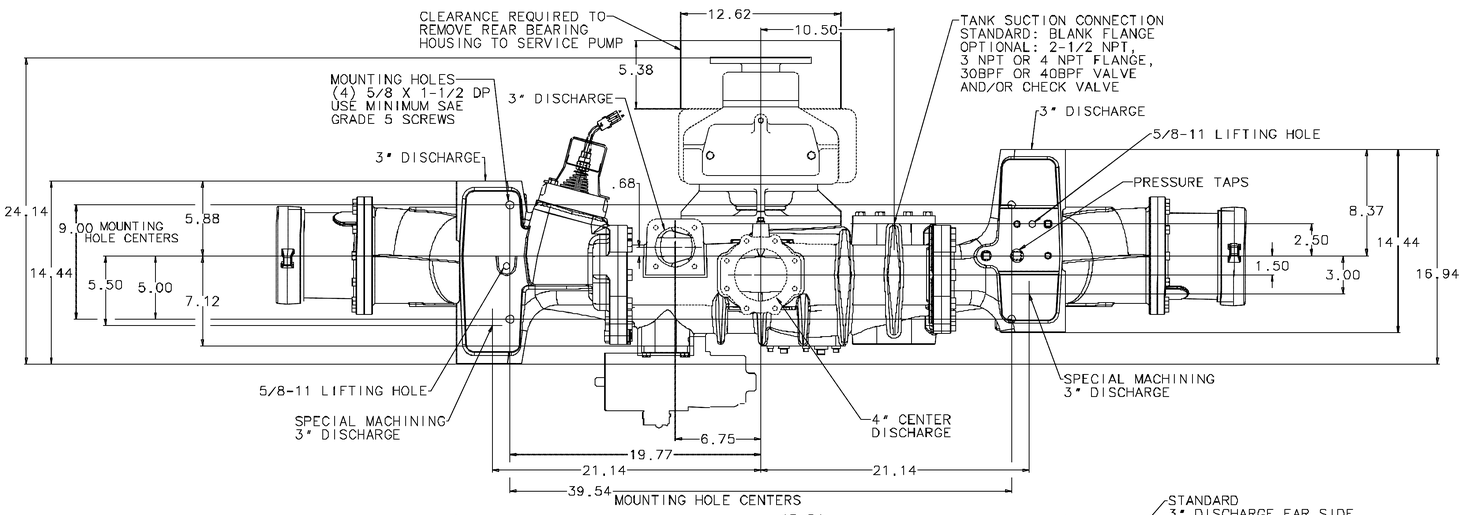

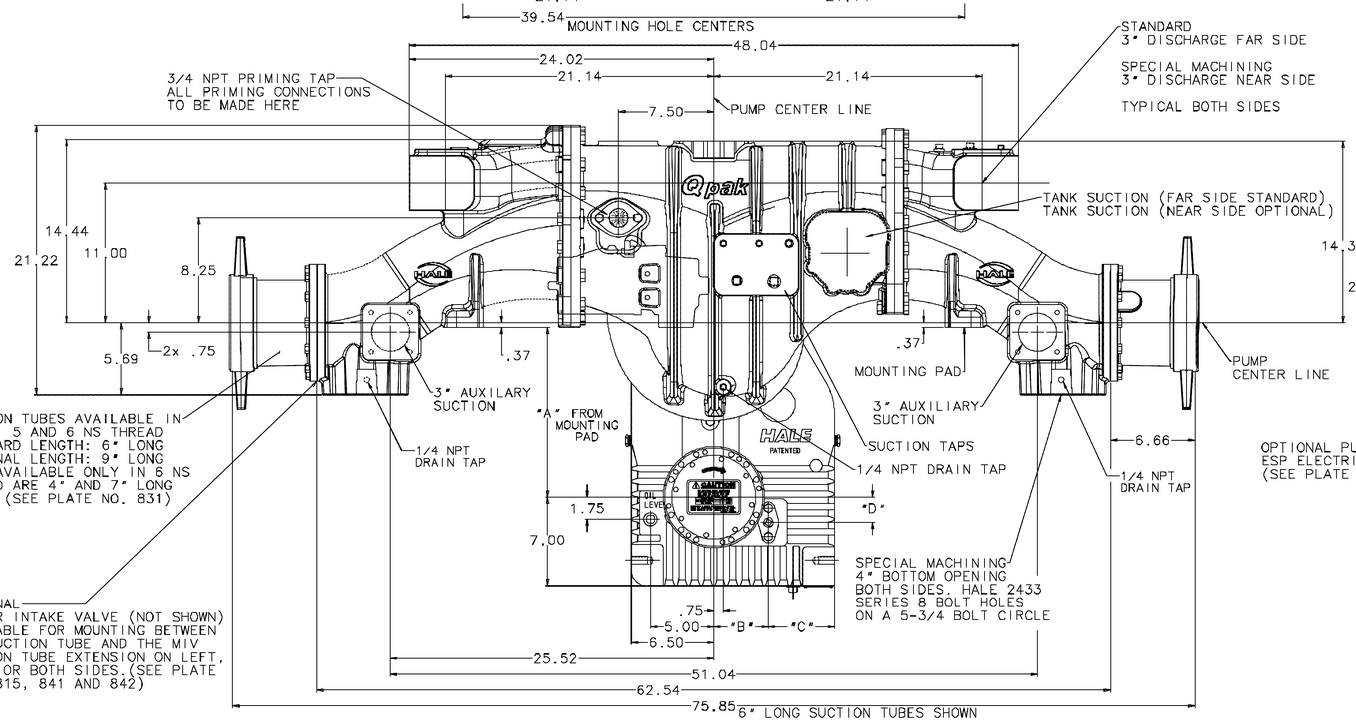

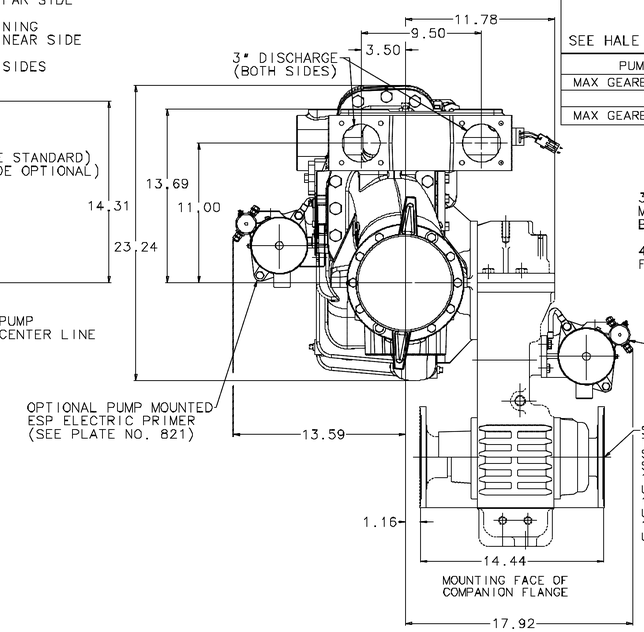

PUMP MODEL	GEAR RATIO	GEARBOX TYPE	DIMENSIONS "A"	"B"	"C"	"D"
QPAK *-28	2.83	EXTRA LONG GEARBOX ONLY (X)	15.18	5.44	4.06	1.84
QPAK *-25	2.55		15.37			
QPAK *-23	2.32		15.52			
QPAK *-21	2.13		15.68			
QPAK *-19	1.96		15.87			
QPAK *-23	2.28	** LONG (L) GEARBOX ONLY	13.00	4.31	5.18	2.00
QPAK *-21	2.05		13.18			
QPAK *-19	1.86		13.37			
QPAK *-17	1.71		13.56			
QPAK *-15	1.58		13.75			

* RATED CAPACITY (GPM) 500, 750 AND 1000

** THE LONG GEARBOX IS STANDARD AND WILL BE SUPPLIED UNLESS OTHERWISE SPECIFIED

EXAMPLE: THE MODEL NUMBER FOR A 1000 GPM RATED PUMP WITH A 2.28 GEARBOX AND A LONG GEARBOX WOULD BE QPAK100-23L

WARNING

EXCEEDING THESE LIMITS OR FAILURE TO FOLLOW THE RECOMMENDATIONS OUTLINED ON THIS DRAWING COULD DAMAGE THE GEARBOX AND RESULT IN PERSONAL INJURY

QPAK MIDSHIP MAXIMUM PUMP PRESSURE (HYDROSTATIC & HYDRODYNAMIC) = 600 PSI
MAXIMUM POWER INPUT FOR PUMPING = 450 HP
MAXIMUM TORQUE ON PUMP SHAFT = 2300 LBS-FT
MAXIMUM GEARBOX SHAFT TORQUE (ROAD) = 16,000 LBS-FT

SEE HALE TORQUE LIMIT CHART F-72 FOR ADDITIONAL DATA

PUMP MODEL	QPAK *-23L	QPAK *-21L	QPAK *-19L	QPAK *-17L	QPAK *-15L
MAX GEARBOX INPUT RPM	2630	2920	3220	3500	3800
PUMP	QPAK *-28X	QPAK *-25X	QPAK *-23X	QPAK *-21X	QPAK *-19X
MAX GEARBOX INPUT RPM	2120	2350	2580	2800	3060

3" DISCHARGE OPENINGS AND 3" AUXILIARY SUCTION OPENINGS ARE MACHINED FOR FOR HALE 115 SERIES 4 BOLT HOLES ON A 4-3/8 BOLT CIRCLE FLANGES.

4" CENTER DISCHARGE AND TANK SUCTION CONNECTION ARE MACHINED FOR HALE 2433 SERIES 8 BOLT HOLES ON A 5-3/4 BOLT CIRCLE FLANGE

PLATE NO. 923AC

QPAK INSTALLATION (WITH G SERIES GEARBOX)

ECO NO	REV	CHANGED FROM	BY	DATE	APVD
00-624	C	ADDED DRAIN TAP CALLOUTS TO RIGHT & LEFT SIDE PUMP BODIES	DJK	10-05-00	MAL
00-544	B	UPDATED VIEWS ONLY	DJK	8-1-00	MAL
00-434	A	RELEASED	DJK	4-24-00	MAL

HALE PRODUCTS, INC.
A Unit of IDEX Corporation
Conshohocken, PA 19428 USA

COPYRIGHT © 2000 HALE PRODUCTS, INC. NOT TO BE REPRODUCED OR USED TO MAKE OTHER DRAWINGS OR MACHINERY.

DRAWN DJK CHECKED MAL DATE 03-31-00 SIZE R SCALE: FULL