OPTIONAL DISCHARGE FLANGES			
STANDARD		OPTIONAL	STD. CAST HOLE
A	BLANK	2-1/2, 3 & 4 NPT	4
B	BLANK	1-1/4, 2, 2-1/2 & 3 NPT	3
C	BLANK	2-1/2, 3 & 4 NPT	3
D	——	2-1/2 & 3 NPT	CAST SOLID
E	——	2-1/2 & 3 NPT	CAST SOLID
F	——	2-1/2 & 3 NPT	CAST SOLID
G	——	2-1/2 & 3 NPT	CAST SOLID
H	BLANK	2-1/2, 3 & 4 NPT	4

NOTE:
1. REFER TO HALE PUMP/ENGINE COMBINATION LIST TO SELECT PROPER RATIO TO MATCH PUMP WITH ENGINE.
2. WEIGHT OF STANDARD QTWO 1500 G.P.M. PUMP AS SHOWN LESS PRIMING PUMP. = 1350 LBS.
3. ✪ = CENTER OF GRAVITY.
4. IMPELLER SHAFT SEAL - MECHANICAL SEAL OR PACKING AVAILABLE
5. SEE LIMIT CHART, HALE DOCUMENT F-72 FOR MAXIMUM ALLOWABLE PUMP PRESSURE, ENGINE HORSEPOWER AND TORQUE LIMITS' FOR HALE CENTRIFUGAL PUMPS.
6. APPLY LOCTITE # 246 HIGH TEMPERATURE THREAD LOCKER OR EQUIVALENT TO SCREW THREADS AND TORQUE SCREWS PER HALE ENGINEERING STANDARD ES018-002
7. UNLESS OTHERWISE INDICATED FASTENERS ARE GRADE 5 ZINC PLATED STEEL

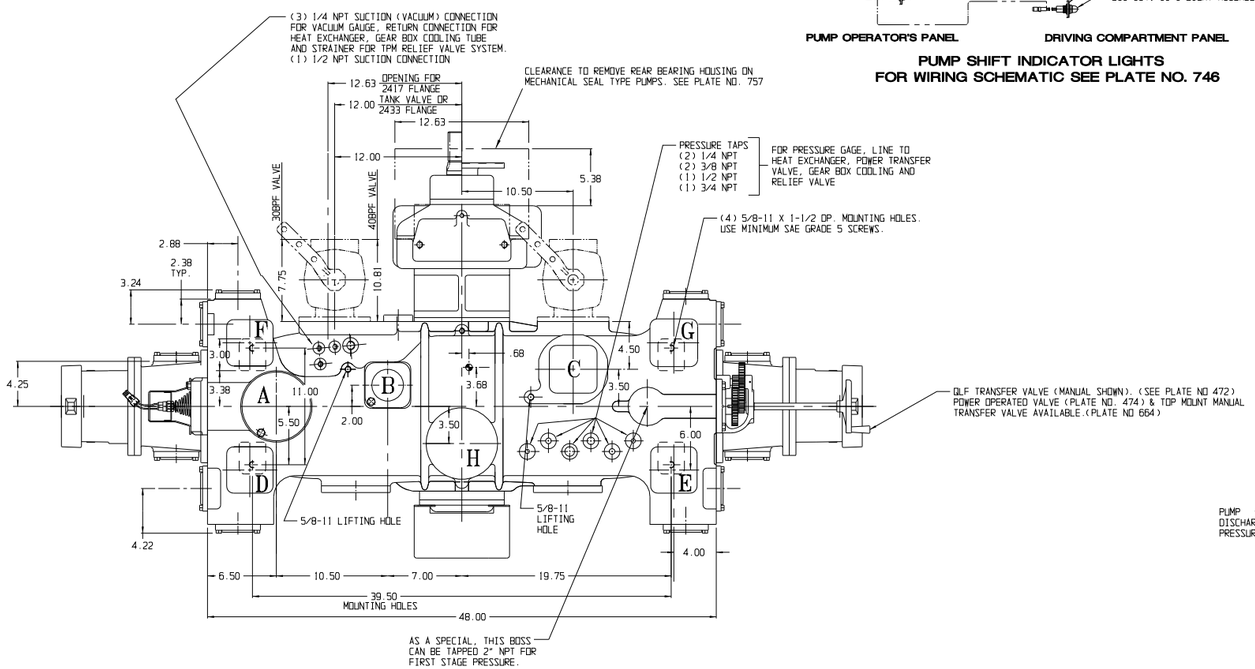

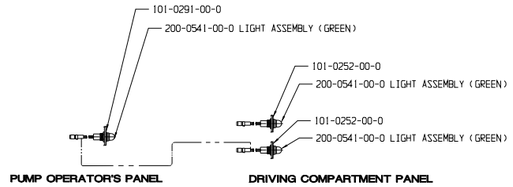

PUMP SHIFT INDICATOR LIGHTS FOR WIRING SCHEMATIC SEE PLATE NO. 746

WARNING

EXCEEDING THESE LIMITS OR FAILURE TO FOLLOW THE RECOMMENDATIONS OUTLINED ON THIS DRAWING COULD DAMAGE THE GEARBOX AND RESULT IN PERSONAL INJURY.
QTWO MIDSHIP MAXIMUM PUMP PRESSURE (HYDROSTATIC & HYDRODYNAMIC) = 600 PSI
2HP HIGH PRESSURE PUMP MAXIMUM PUMP PRESSURE (HYDROSTATIC & HYDRODYNAMIC) = 1000 PSI
MAXIMUM POWER INPUT FOR PUMPING = 450 HP.
MAXIMUM TORQUE ON PUMP SHAFT = 2300 LBS-FT
MAXIMUM GEARBOX SHAFT TORQUE (ROAD) = 16,000 LBS-FT

PUMP MODEL	QTWO*-23 L/S	QTWO*-21 L/S	QTWO*-19 L/S	QTWO*-17 L/S	QTWO*-15 L/S
MAX GEARBOX INPUT RPM	1920	2130	2340	2550	2750
PUMP MODEL	QTWO*-28X	QTWO*-25X	QTWO*-23X	QTWO*-21X	QTWO*-19X
MAX GEARBOX INPUT RPM	1550	1720	1880	2050	2220

SEE HALE TORQUE LIMIT CHART F-72 FOR ADDITIONAL DATA.
THIS PRODUCT AND ITS COMPONENTS ARE PROTECTED BY ONE OR MORE OF THE FOLLOWING U.S. PATENTS AND OTHER PATENTS PENDING:

950,756	3,500,961	3,859,703	4,209,282	4,587,862
3,116,694	3,726,308	3,918,681	4,311,440	4,653,978
3,159,559	3,801,224	4,089,345	4,337,830	

PUMP MODEL	GEAR RATIO	GEARBOX TYPE **	DIMENSIONS E	F	G	H	J
QTWO*-28	2.83	EXTRA LONG GEARBOX ONLY (X)	13.56	6.50	5.44	4.06	1.84
QTWO*-25	2.55		13.75				
QTWO*-23	2.32		13.90				
QTWO*-21	2.13		14.06				
QTWO*-19	1.96		14.25				
QTWO*-23	2.28	LONG (L)	11.38	6.50	4.31	5.18	2.00
		SHORT (S)	9.50		4.75	2.75	.38
QTWO*-21	2.05	LONG (L)	11.56		4.31	5.18	2.00
		SHORT (S)	9.68		4.75	2.75	.38
QTWO*-19	1.86	LONG (L)	11.75		4.31	5.18	2.00
		SHORT (S)	9.88		4.75	2.75	.38
QTWO*-17	1.71	LONG (L)	11.94		4.31	5.18	2.00
		SHORT (S)	10.06		4.75	2.75	.38
QTWO*-15	1.58	LONG (L)	12.13		4.31	5.18	2.00
		SHORT (S)	10.25		4.75	2.75	.38

* RATED CAPACITY (GPM) 1000, 1250, 1500, 1750 AND 2000

** THE SHORT (S) GEARBOX IS STANDARD AND WILL BE SUPPLIED UNLESS OTHERWISE SPECIFIED.

EXAMPLE: THE MODEL NUMBER FOR A 1500 GPM RATED PUMP WITH A 2.28 GEAR RATIO AND A SHORT GEARBOX WOULD BE QTWO150-23S.

DRIVE LINE RECOMMENDATIONS

APPARATUS BUILDER SUPPLIED DRIVELINES SHALL BE OF APPROPRIATE SIZE TO MATCH THE CHASSIS AND PUMP REQUIREMENTS WITH INDIVIDUAL JOINT CANCELLATION AND PHASING BEFORE AND AFTER THE PUMP. DRIVE SHAFT BALANCE (INCLUDING YOKES) SHALL NOT EXCEED THE RECOMMENDED LIMIT OF EITHER THE DRIVE SHAFT OR CHASSIS TRANSMISSION MANUFACTURER'S SPECIFICATIONS. DRIVE SHAFT FULL RANGE OPERATING SPEEDS SHALL NOT EXCEED 42% OF ITS CRITICAL SPEED.

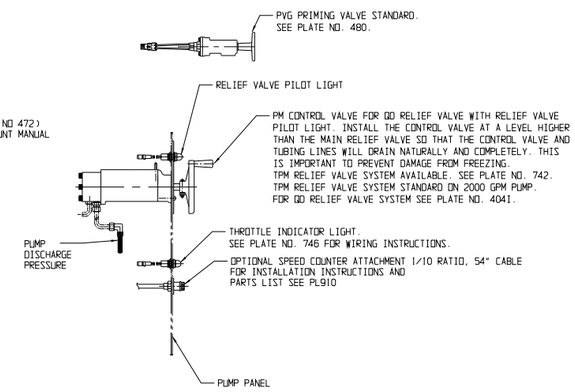

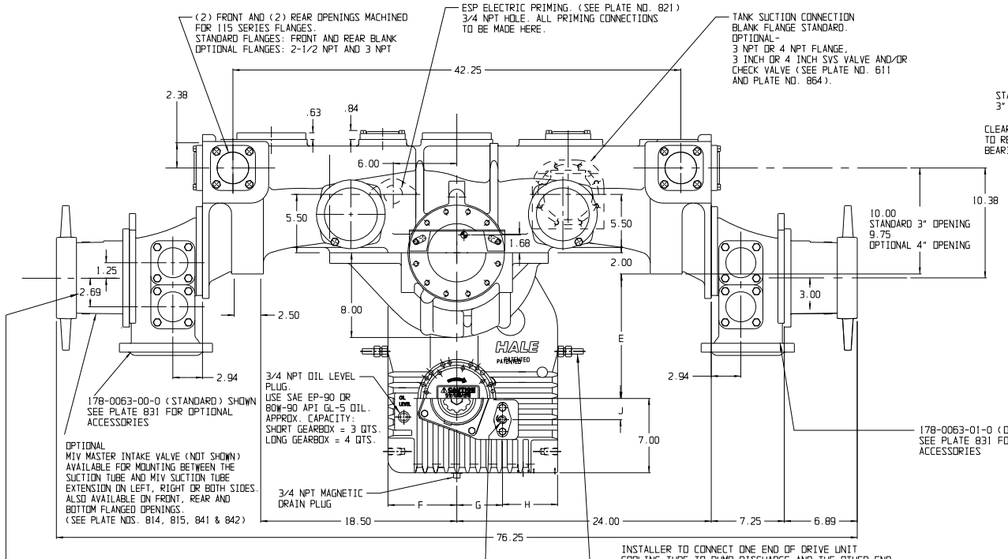

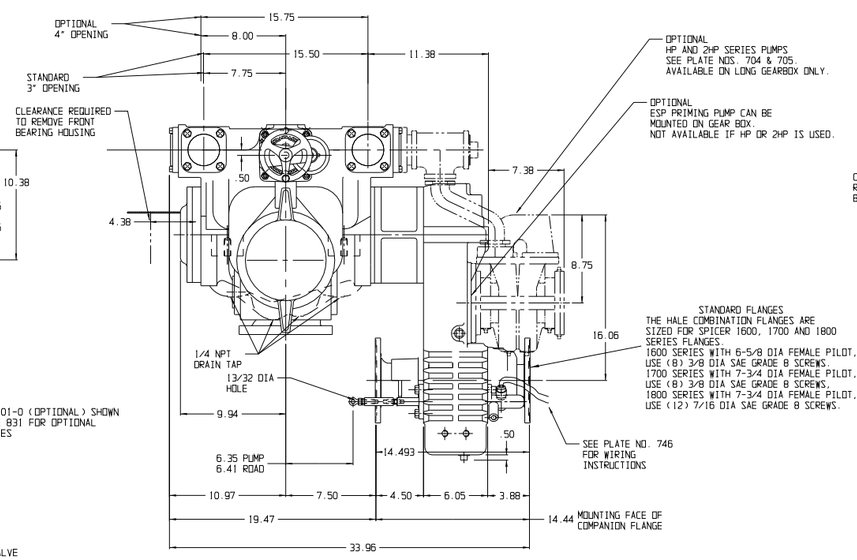

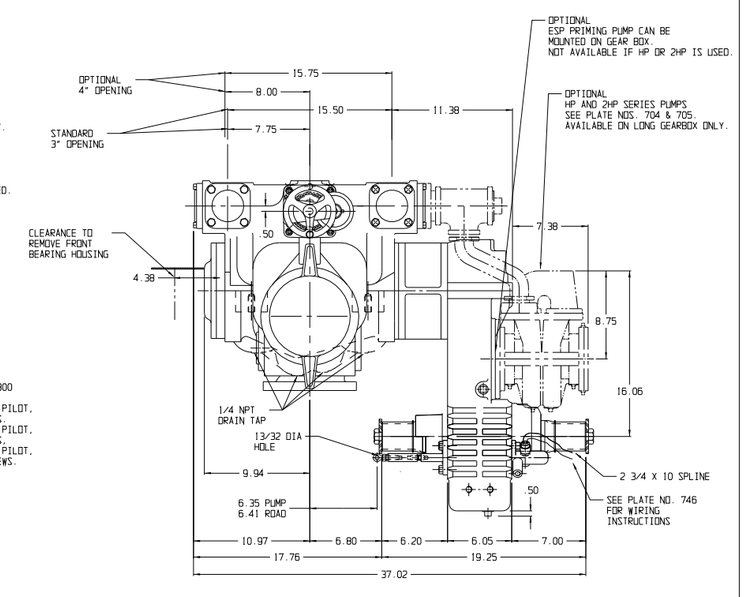

ECO NO	REV	CHANGED FROM	BY	DATE	APVD
0307	C	UPDATED DRAWING TO MATCH CURRENT PRODUCTION	DBH	01-31-06	MAL
00-441	B	UPDATED DRAWING	DJK	4-10-00	MAL
99-121	A	RELEASE FOR PRODUCTION	DPL	6-15-99	RET

HALE PRODUCTS, INC.
A Unit of IDEX Corporation
Conshohocken, PA 19428 USA

COPYRIGHT © NOT TO BE REPRODUCED OR USED TO MAKE OTHER DRAWINGS OR MACHINERY

DRAWN | NO | CHECKED | RET | DATE 5-15-98 | SIZE F | SCALE: .20

PLATE NO.889AC